LENTA U BOLLARD

Design: GINMAN, HARBOE, BORUP LANDSKABSARKITEKTER

Round top with no groove
Available as stationary bollard in one piece
Available in tiltable version (30°) with rubber joint (LENTA FLEX)

HITSA A/S
Albuen 37
DK 6000 Kolding
+45 75 57 41 55
hitsa@hitsa.com
www.hitsa.com

HITSA
WE SUPPLY OUTDOOR SPACES

LentaU Ø114

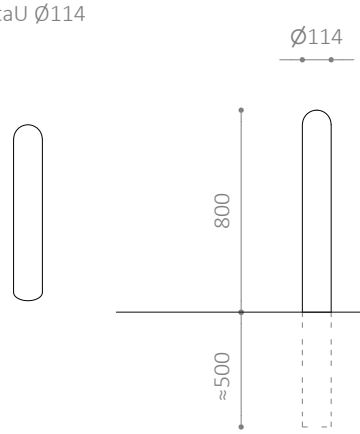

LentaU Ø114 Flex

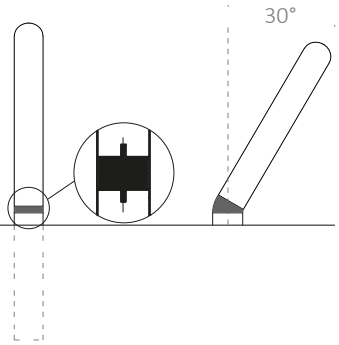

LentaU Ø89

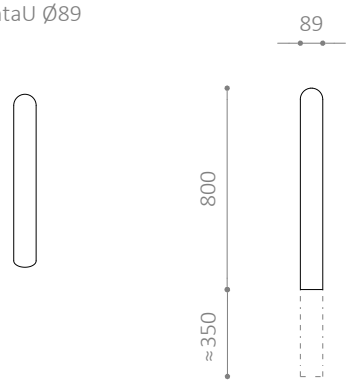

LENTA U BOLLARD
- Round top with no groove
- Available as stationary bollard in one piece
- Available in tiltable version (30°) with rubber joint (LENTA FLEX)
- Optional extra: Eyes, shackles and chains
- Also available in any RAL colour

MATERIALS:
- Hot-dip galvanised steel
- Also available in powder-coated, hot-dip galvanised steel

DIMENSIONS:
Ø114 mm
Ø89 mm

INSTALLATION:
- Available for embedding or bolting to the foundation
- Recommended base dimensions: Ø300 x H600 mm
- Recommended base dimensions LENTA FLEX: Ø400 x H600 mm
- Distance from ground to upper edge: 800 mm

We reserve the right to make minor changes

HITSA A/S
Albuen 37
DK 6000 Kolding
+45 75 57 41 55
hitsa@hitsa.com
www.hitsa.com

HITSA
WE SUPPLY OUTDOOR SPACES